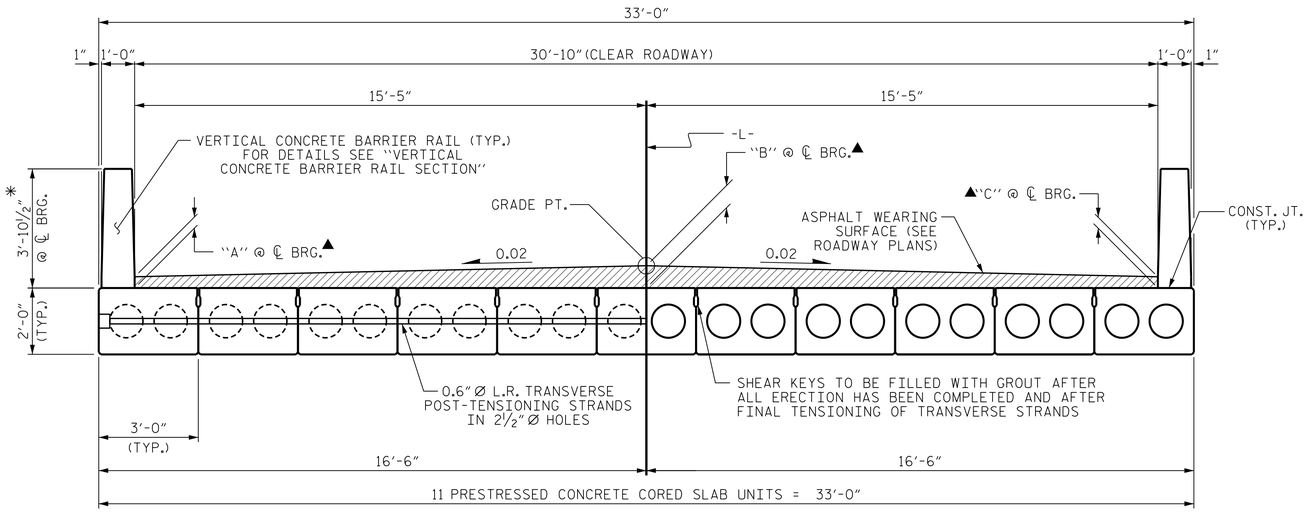

HALF SECTION
AT INTERMEDIATE DIAPHRAGMS

TYPICAL SECTION

HALF SECTION
THROUGH VOIDS

✳ - THE MAXIMUM BARRIER RAIL HEIGHT AND ASPHALT THICKNESS IS SHOWN. THE HEIGHT OF THE BARRIER RAIL AND ASPHALT THICKNESS VARIES WHILE THE TOP OF THE BARRIER RAIL FOLLOWS THE PROFILE OF THE GUTTERLINE. FOR RAIL HEIGHT DETAILS AND ASPHALT THICKNESS, SEE THE "VERTICAL CONCRETE BARRIER RAIL SECTION" DETAIL.

▲ - SEE ASPHALT WEARING SURFACE THICKNESS DETAIL.

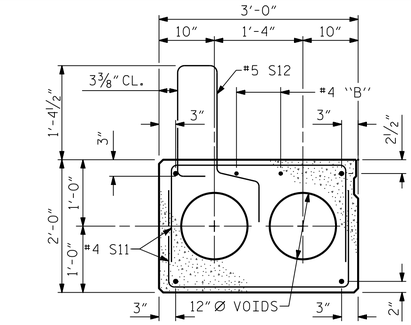

EXTERIOR SLAB SECTION

(FOR PRESTRESSED STRAND LAYOUT, SEE INTERIOR SLAB SECTION.)

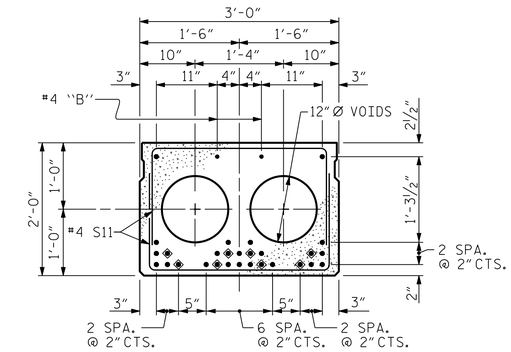

INTERIOR SLAB SECTION (70' UNIT)

(28 STRANDS REQUIRED)

0.6" Ø LOW RELAXATION STRAND LAYOUT

◈ BOND SHALL BE BROKEN ON THESE STRANDS FOR A DISTANCE OF 12'-0" FROM END OF CORED SLAB UNIT. SEE STANDARD SPECIFICATIONS, ARTICLE 1078-7.

DEBONDING LEGEND

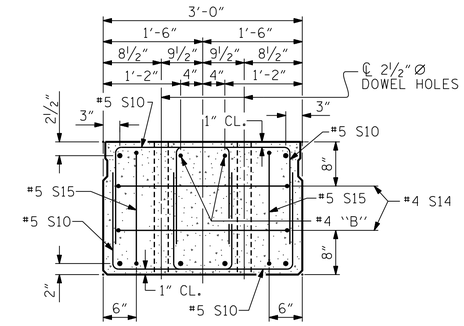

END ELEVATION

SHOWING PLACEMENT OF DOUBLE STIRRUPS AND LOCATION OF DOWEL HOLES. (STRAND LAYOUT NOT SHOWN.) INTERIOR SLAB UNIT SHOWN-EXTERIOR SLAB UNIT SIMILAR EXCEPT SHEAR KEY LOCATION.

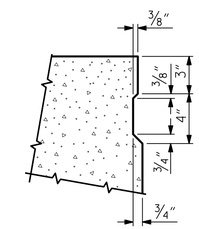

SHEAR KEY DETAIL

NOTE: OMIT SHEAR KEY ON OUTSIDE FACE OF EXTERIOR CORED SLABS.

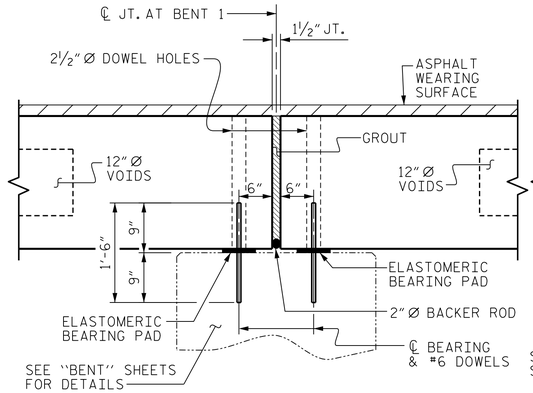

SECTION AT BENT 1

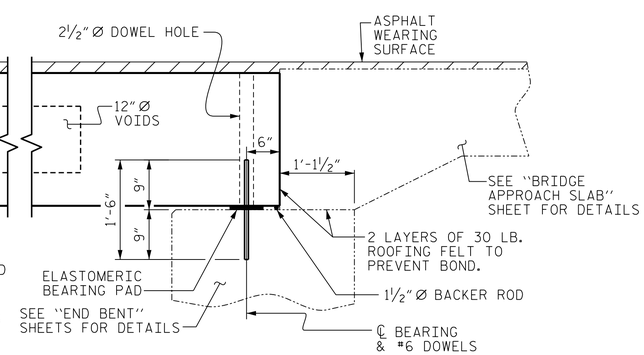

SECTION AT END BENT 2

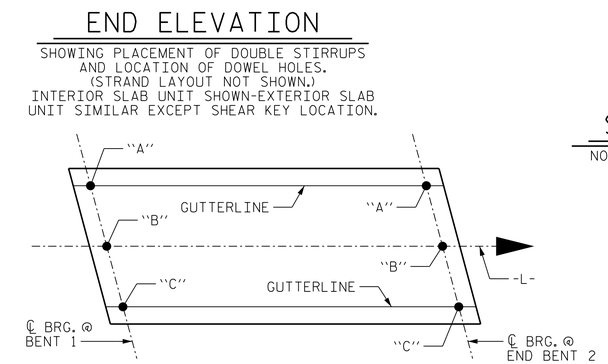

ASPHALT WEARING SURFACE THICKNESS

NOTE: AWS THICKNESS INCLUDES IMPACT OF SAG VERTICAL CURVE AND BRIDGE SKEW.

	BENT 1	END BENT 2
DIM. "A"	3½"	3½"
DIM. "B"	7¼"	7½"
DIM. "C"	3½"	4³⁄₁₆"

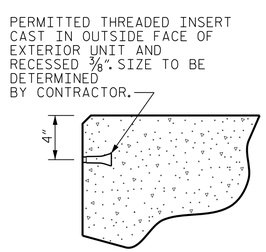

THREADED INSERT DETAIL

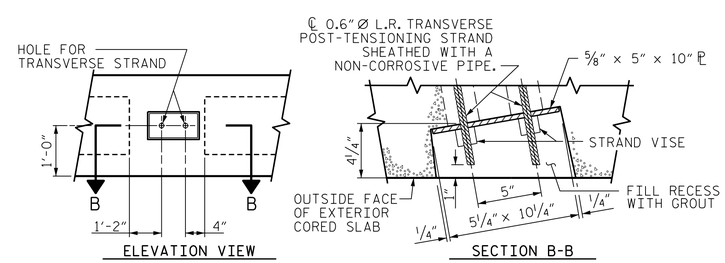

GROUTED RECESS AT END OF POST-TENSIONED STRAND-CORED SLABS

PROJECT NO. 17BP.8.R.115
RANDOLPH COUNTY
STATION: 17+24.00 -L-

SHEET 4 OF 6

STATE OF NORTH CAROLINA
DEPARTMENT OF TRANSPORTATION
RALEIGH

STANDARD
3'-0" X 2'-0"
PRESTRESSED CONCRETE CORED SLAB UNIT
SPAN B

NORTH CAROLINA PROFESSIONAL SEAL 24939 ENGINEER BYRON E. ATKINSON
4/18/2017

DOCUMENT NOT CONSIDERED FINAL UNLESS ALL SIGNATURES COMPLETED

MI ENGINEERING
1011 SCHAUB DRIVE, SUITE 100
RALEIGH, NC 27606
(919) 851-6606
FIRM PE NUMBER : P-0671

ASSEMBLED BY:	B.E. LANNING	DATE: 12/16				
CHECKED BY :	B.E. ATKINSON	DATE: 01/17				
DESIGN ENGINEER OF RECORD:	B.E. ATKINSON	DATE: 03/17				
DRAWN BY : MAA 6/10	REV. 9/14	MAA/TMG				
CHECKED BY : MKT 7/10						

REVISIONS						SHEET NO.
NO.	BY:	DATE:	NO.	BY:	DATE:	S-9
1			3			TOTAL SHEETS
2			4			20

STD. NO. 24PCS4_33_75S

4/18/2017
11:49:15 AM
User: blanning
Filename: P:\NC Bridges\MI6005_CH Eng.Div.8 Br. Repl.16 Bridges\MI6005.02_Randolph 128\17BP8R115\Structures\401.015_17BP8R115_SMU_CSU4.dgn