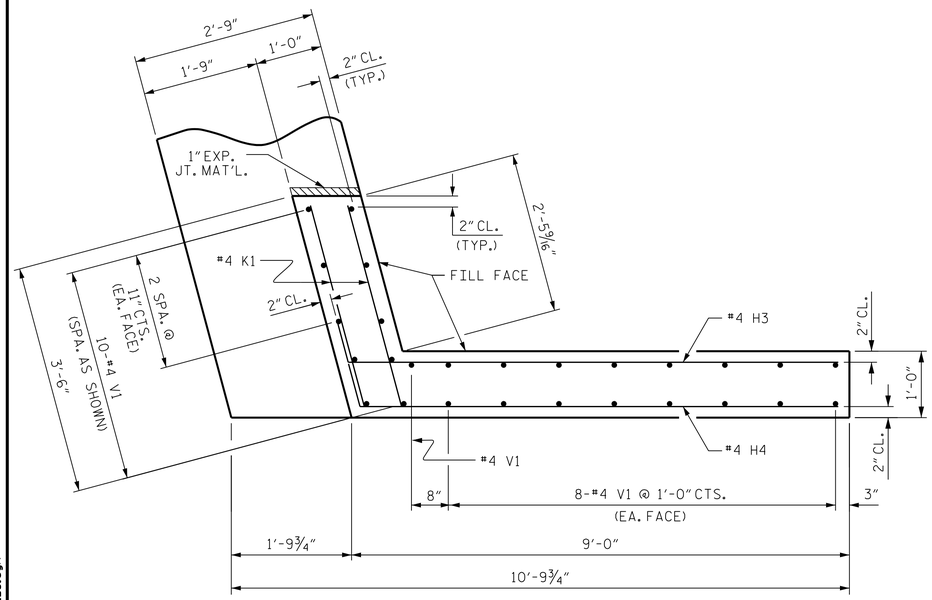

PLAN OF WING (W1)

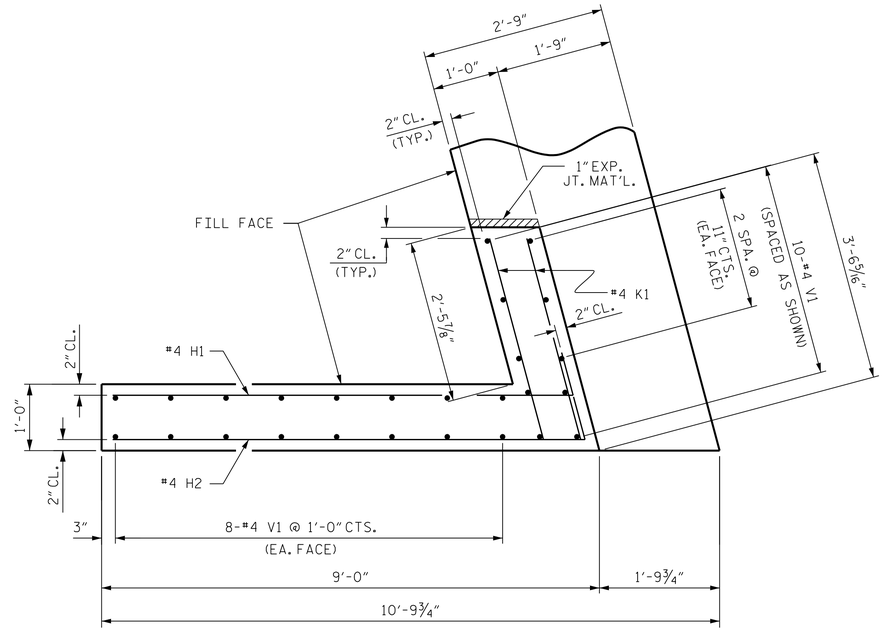

PLAN OF WING (W2)

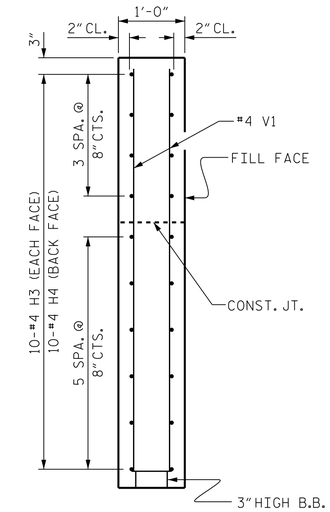

SECTION X-X

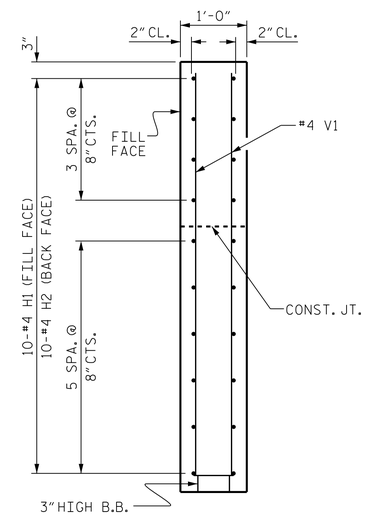

SECTION Y-Y

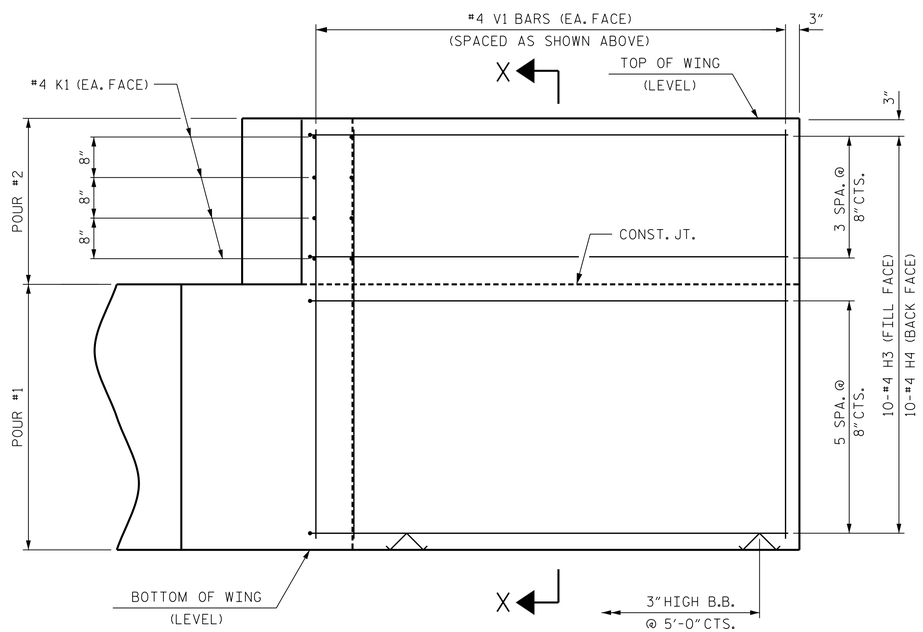

ELEVATION OF WING (W1)

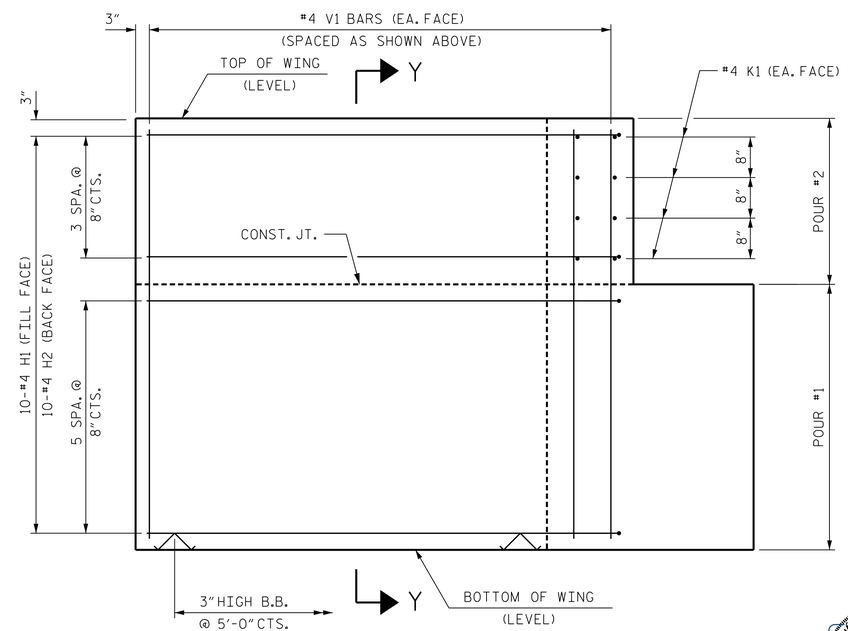

ELEVATION OF WING (W2)

WING DETAILS

PROJECT NO. 17BP.8.R.115

RANDOLPH COUNTY

STATION: 17+24.00 -L-

SHEET 3 OF 4

STATE OF NORTH CAROLINA
DEPARTMENT OF TRANSPORTATION
RALEIGH

SUBSTRUCTURE
END BENT
WING DETAILS

NORTH CAROLINA PROFESSIONAL ENGINEER SEAL 24939 BYRON E. ATKINSON
4/18/2017

DOCUMENT NOT CONSIDERED FINAL UNLESS ALL SIGNATURES COMPLETED

MI ENGINEERING
1011 SCHAUB DRIVE, SUITE 100
RALEIGH, NC 27606
(919) 851-6606
FIRM PE NUMBER : P-0671

REVISIONS						SHEET NO.
NO.	BY:	DATE:	NO.	BY:	DATE:	S-15
1			3			TOTAL SHEETS
2			4			20

ASSEMBLED BY:	B.E. LANNING	DATE:	12/16
CHECKED BY :	B.E. ATKINSON	DATE:	03/17
DESIGN ENGINEER OF RECORD:	B.E. ATKINSON	DATE:	03/17
DRAWN BY : WJH 12/11	REV. 4/15	MAA/TMG	
CHECKED BY : AAC 12/11			

STD. NO. EB_33_75S4

4/18/2017
11:49:28 AM
User: blanning
Filename: P:\NC Bridges\M16005_CH Eng_Div. 8 Br. Repl. (6 Bridges)\M16005_02_Randolph 128\17BP8R115\Structures\401_027_17BP8R115_SMU_EB3.dgn