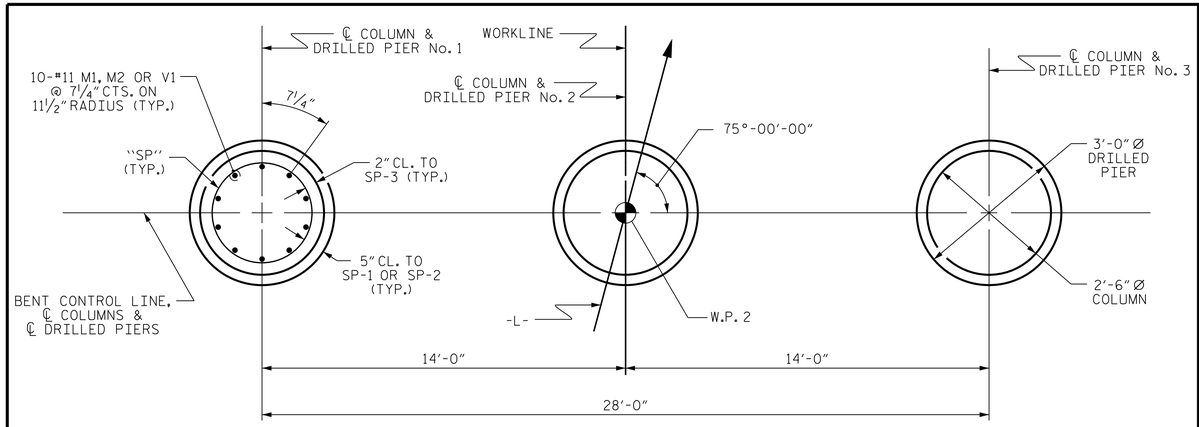

PLAN OF DRILLED PIERS & COLUMNS

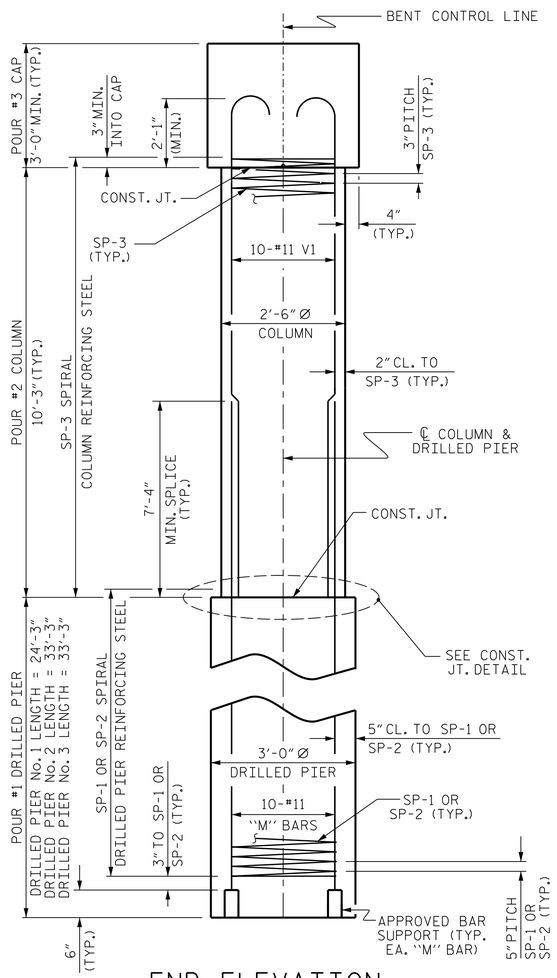

END ELEVATION

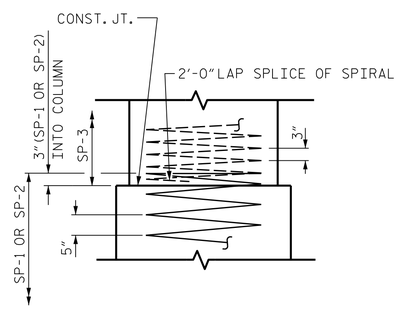

CONSTRUCTION JOINT DETAIL

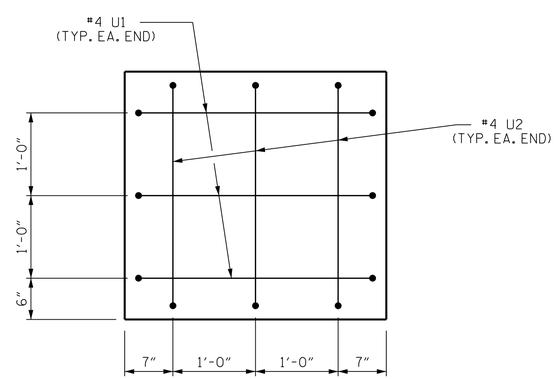

END OF CAP VIEW

(TYPICAL BOTH ENDS)

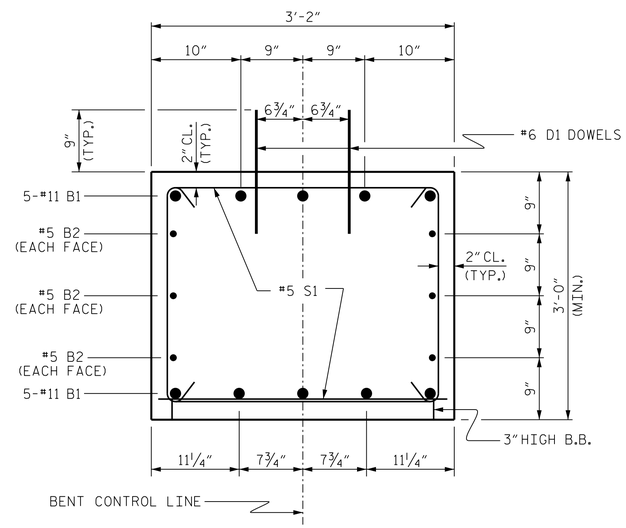

SECTION THRU CAP

BAR TYPES

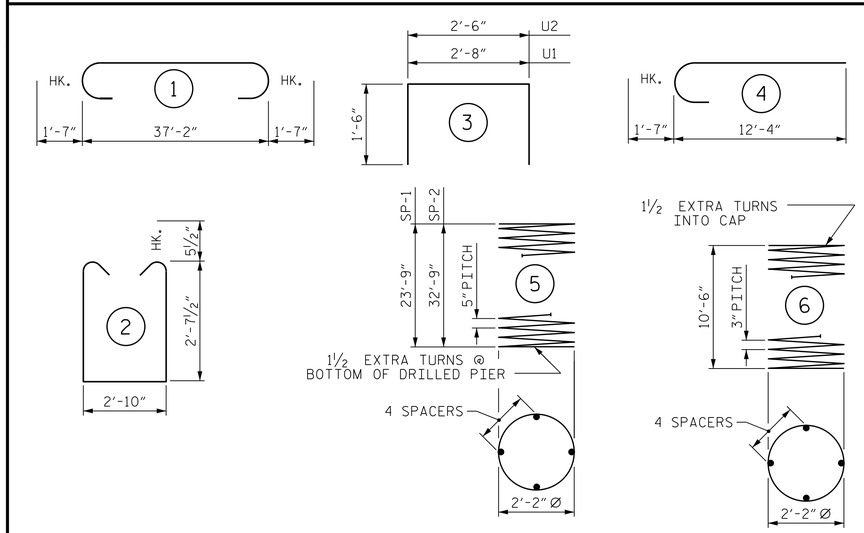

ALL BAR DIMENSIONS ARE OUT TO OUT.

BILL OF MATERIAL

BENT No. 1

BAR	NO.	SIZE	TYPE	LENGTH	WEIGHT
B1	10	#11	1	40'-4"	2143
B2	6	#5	STR	37'-4"	234
D1	44	#6	STR	1'-6"	99
M1	10	#11	STR	34'-1"	1811
M2	20	#11	STR	43'-1"	4578
S1	64	#5	2	9'-0"	601
U1	6	#4	3	5'-8"	23
U2	6	#4	3	5'-6"	22
V1	30	#11	4	13'-11"	2218
REINFORCING STEEL					11,729 LBS.

BAR	NO.	SIZE	TYPE	LENGTH	WEIGHT
SP-1	1	✳	5	388'-5"	405
SP-2	2	✳	5	531'-10"	1109
SP-3	3	✳✳	6	289'-11"	581
SPIRAL COLUMN REINFORCING STEEL					2095 LBS.

✳ THE SP-1 & SP-2 SPIRAL REINFORCING STEEL SHALL BE W31 OR D-31 COLD DRAWN WIRE OR #5 PLAIN OR DEFORMED BAR

✳✳ THE SP-3 SPIRAL REINFORCING STEEL SHALL BE W20 OR D-20 COLD DRAWN WIRE OR #4 PLAIN OR DEFORMED BAR

CLASS A CONCRETE BREAKDOWN

POUR #2 (COLUMNS)	5.6 C.Y.
POUR #3 (CAP)	13.4 C.Y.
TOTAL CLASS A CONCRETE	19.0 C.Y.

DRILLED PIERS:

DRILLED PIER CONCRETE POUR #1 (DRILLED PIERS)	23.8 C.Y.
3'-0" Ø DRILLED PIER NOT IN SOIL	31.0 LIN. FT.
3'-0" Ø DRILLED PIER IN SOIL	59.8 LIN. FT.
PERMANENT STEEL CASING FOR 3'-0" Ø DRILLED PIER	28.1 LIN. FT.
CSL TUBES	381.0 LIN. FT.

PROJECT NO. 17BP.8.R.115

RANDOLPH COUNTY

STATION: 17+24.00 -L-

SHEET 2 OF 2

STATE OF NORTH CAROLINA
DEPARTMENT OF TRANSPORTATION
RALEIGH

SUBSTRUCTURE

BENT No. 1

NORTH CAROLINA PROFESSIONAL SEAL 24939 ENGINEER BYRON E. ATKINSON
4/18/2017

DOCUMENT NOT CONSIDERED FINAL UNLESS ALL SIGNATURES COMPLETED

MI ENGINEERING
1011 SCHAUB DRIVE, SUITE 100
RALEIGH, NC 27606
(919) 851-6606
FIRM PE NUMBER : P-0671

REVISIONS							SHEET NO.
NO.	BY:	DATE:	NO.	BY:	DATE:		S-18
1			3				TOTAL SHEETS
2			4				20

DRAWN BY :	B.E. LANNING	DATE :	12/16
CHECKED BY :	B.E. ATKINSON	DATE :	03/17
DESIGN ENGINEER OF RECORD :	B.E. ATKINSON	DATE :	03/17

4/18/2017
11:49:40 AM
User: blanning
Filename: P:\NC Bridges\MI6005_CH Eng_Div. 8 Br._Repl. 16 Bridges\MI6005_02_Randolph 128\17BP8R115\Structures\401_033_17BP8R115_SMU_BIB.dgn