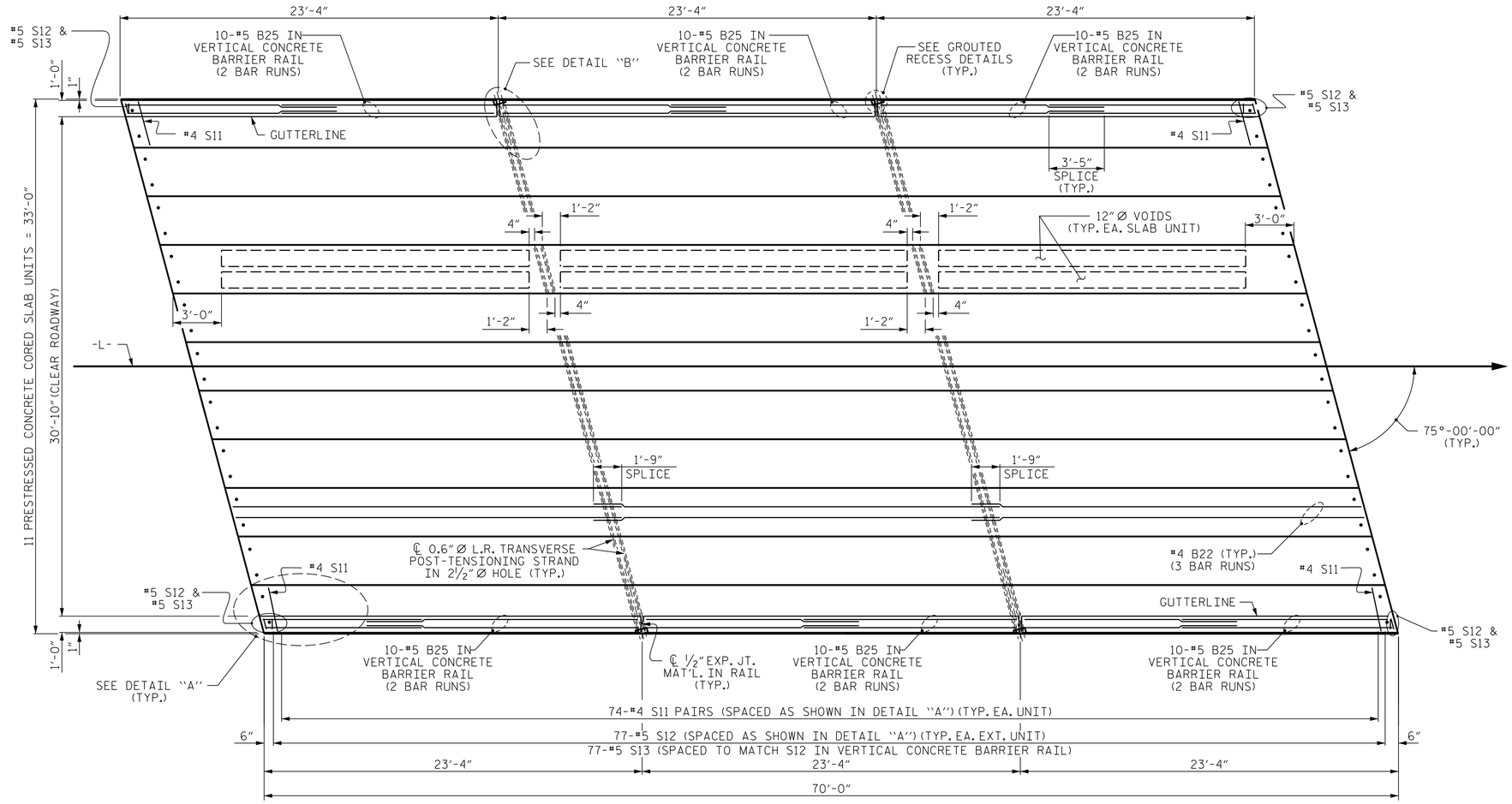

PLAN OF UNIT

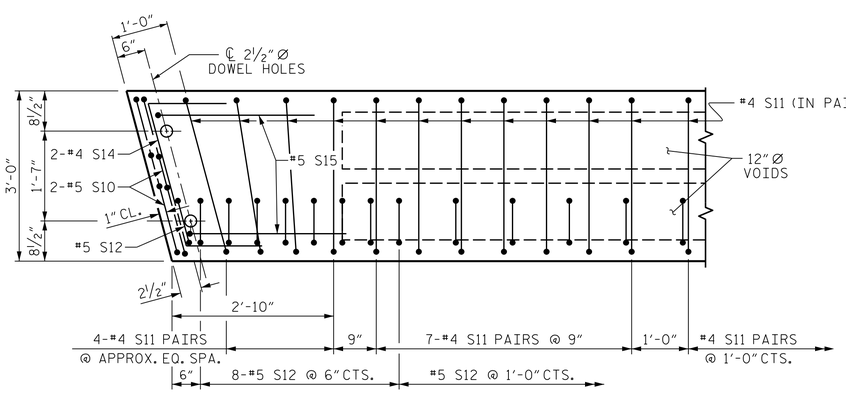

DETAIL "A"

(SIMILAR EACH END OF UNIT)
NOTE: EXTERIOR UNIT SHOWN - INTERIOR UNIT SIMILAR EXCEPT OMIT #5 S12 BARS.

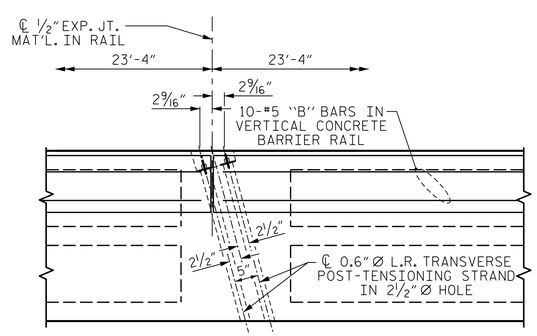

DETAIL "B"

#4 S11 BARS MAY BE SHIFTED AS NECESSARY TO MAINTAIN 1" CLEAR TO GROUTED RECESS AND 2½" Ø TRANSVERSE POST-TENSIONING STRAND HOLES

PROJECT NO. 17BP.8.R.115
RANDOLPH COUNTY
STATION: 17+24.00 -L-

SHEET 5 OF 6

STATE OF NORTH CAROLINA
DEPARTMENT OF TRANSPORTATION
RALEIGH

STANDARD

PLAN OF 70' UNIT
30'-10" CLEAR ROADWAY
75° SKEW
SPAN B

NORTH CAROLINA PROFESSIONAL SEAL 24939 ENGINEER BYRON E. ATKINSON
4/18/2017

DOCUMENT NOT CONSIDERED FINAL UNLESS ALL SIGNATURES COMPLETED

MI ENGINEERING
1011 SCHAUB DRIVE, SUITE 100
RALEIGH, NC 27606
(919) 851-6606
FIRM PE NUMBER : P-0671

ASSEMBLED BY:	B.E. LANNING	DATE:	12/16
CHECKED BY :	B.E. ATKINSON	DATE:	01/17
DESIGN ENGINEER OF RECORD:	B.E. ATKINSON	DATE:	03/17
DRAWN BY : MAA 6/10	REV. 12/5/11	MAA/AAC	
CHECKED BY : MKT 7/10	REV. 8/14	MAA/TMG	

REVISIONS							SHEET NO.
NO.	BY:	DATE:	NO.	BY:	DATE:		S-10
1			3				TOTAL SHEETS
2			4				20

STD. NO. 24PCS_33_75S_70L

4/18/2017
11:49:17 AM
User: blanning
Filename: P:\NC Bridges\MI6005_CH Eng_Div. 8 Br._Repl. 16 Bridges\MI6005.02_Randolph 128\17BP8R115\Structures\401_017_17BP8R115_SMU_CSU5.dgn